CLUE

BOG OAK

THE STORY

THIS IS CLUE BOG OAK COLLECTION

Elegant and luxuriant are the two words that best describe
this latest addition to our burgeoning collection.

Clue is sanded and polished ultra-smooth, its lines and shapes sharp and sleek.
Colour selected and book matched where needed.

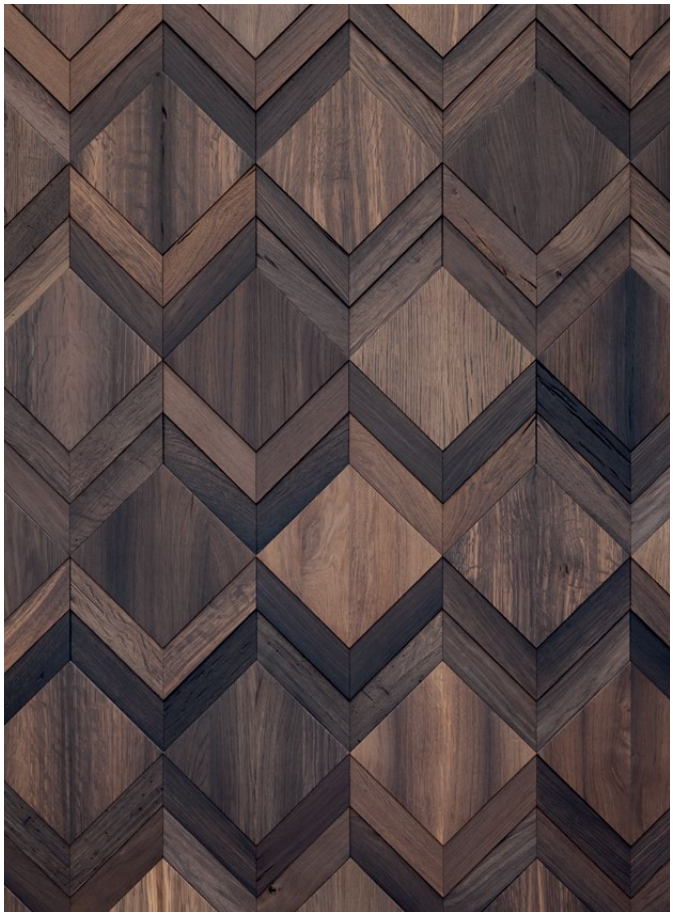

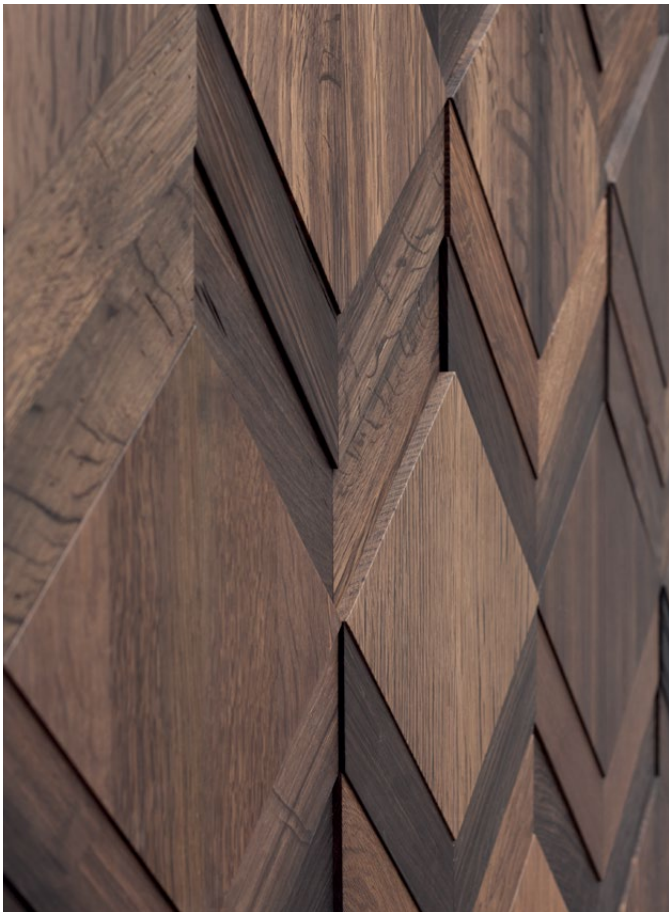

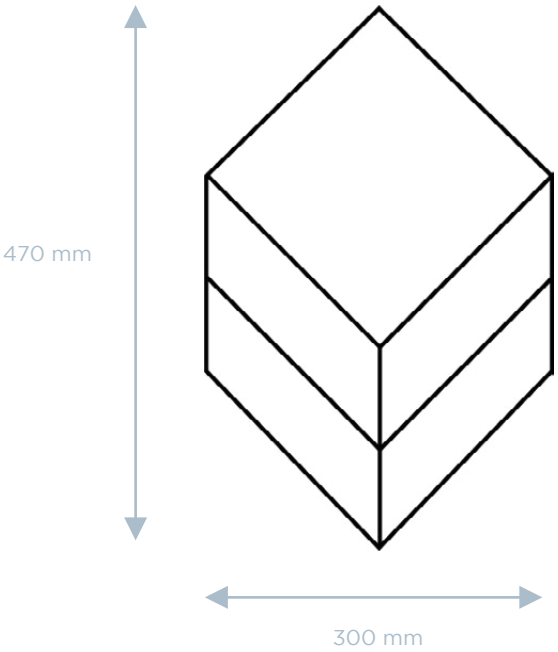

CLUE BOG OAK	
COLLECTION	The Bog Oak Collection
COUNTRY	Ukraine
WOOD	Bog Oak
CODE	20-01-UKR-BOG
TILE DIMENSIONS	multiple angles
TILE SURFACE	0,096 sqm
TILE THICKNESS	18-26 mm
TILE WEIGHT	1,4 kg
SUBSTRATE	15 mm plywood
FINISH	transparent Coating
PACKUNIT	10 pcs
BOX SURFACE	0,96 sqm

DARK WETLANDS BROODY AGED

THE BOG OAK COLLECTION

Our bog oak is central European oak that has been buried in peat bog for hundreds and in some cases thousands of years. The bog saturates and soaks the wood, the acids and minerals enrich and give colour. Dramatic black, grey and brown tones.

A very exclusive wood type that receives premium treatment and craftmanship.

Explore our premium process: watch our Bog Oak movie here.

WONDERWALL STUDIOS

Our vision
To add beauty to interiors the world over.

Our mission
To offer you premium panels through the highest quality of craftmanship.

Why
We love adventures and experience great joy when seeking craftspeople
in far off corners of the world.
We love creating beautiful and meaningful designs that last a lifetime.
We are committed to, and passionate about offering you the best of the best.

How
We always go the extra mile and never, ever cut corners.
Can it be done?
'Yes, but …'

Great! Let's do it!

WONDERWALLSTUDIOS.COM

INFO@WONDERWALLSTUDIOS.COM

Wonderwall Studios ®
© 2025 Wonderwall Studios