RIDGE

WALNUT

THE STORY

THIS IS RIDGE WALNUT COLLECTION

Elegant, geometrical and diagonal linearity.

Each area has selected deep Walnut colours. More modest, yet outspoken, an art piece on its own.

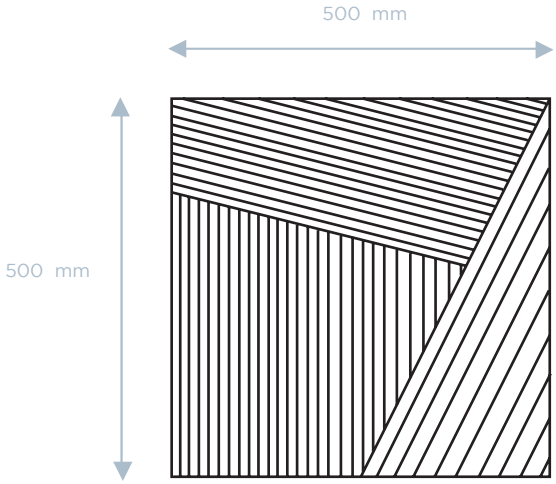

RIDGE WALNUT 1

RIDGE WALNUT 2

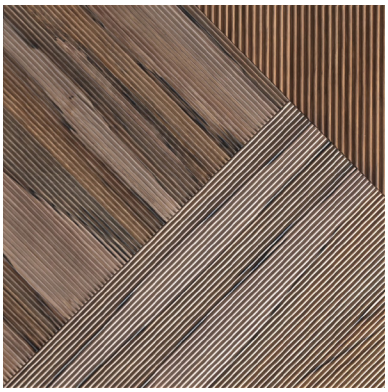

RIDGE WALNUT 3

RIDGE WALNUT 4

RIDGE WALNUT	
COLLECTION	The Walnut Collection
COUNTRY	Ukraine
WOOD	Ukrainian Walnut
CODE	34-01-UKR-WAL
TILE DIMENSIONS	500*500 mm
TILE SURFACE	0,250 sqm
TILE THICKNESS	20 mm
TILE WEIGHT	3,6 kg
SUBSTRATE	3 mm ash backing - 12 mm mdf egger - 5mm top
FINISH	Transparent Coating
PACKUNIT	4 pcs.
BOX SURFACE	1,00 sqm

FLAMED STRAIGHT DANCING GRAIN

THE WALNUT COLLECTION

Our walnut collection boasts two walnut varieties, to wit: American walnut from Vietnam and Ukrainian walnut from where it derives its name. Sapwood, overstock and pruned branches. It's all there.

The American walnut with its red and purple hues. Where tones vary between lighter sapwood and darker heartwood. And Ukrainian walnut with its brown tones and dramatic black streaks in the grain.

WONDERWALL STUDIOS

Our vision
To add beauty to interiors the world over.

Our mission
To offer you premium panels through the highest quality of craftmanship.

Why
We love adventures and experience great joy when seeking craftspeople
in far off corners of the world.
We love creating beautiful and meaningful designs that last a lifetime.
We are committed to, and passionate about offering you the best of the best.

How
We always go the extra mile and never, ever cut corners.
Can it be done?
'Yes, but …'

Great! Let's do it!

WONDERWALLSTUDIOS.COM

INFO@WONDERWALLSTUDIOS.COM

Wonderwall Studios ®
© 2024 Wonderwall Studios